3-way Ball Valve S4
hand operated


Symbolfoto

General:

- Body material PVC-U / PP / PVDF
- Sealing material EPDM / FPM
- Ball seating joint PTFE
- Ball T- or L-bore
- Dimensions
  DN10 (DN15 / d16 / d3/8“)
  DN15 d20 d1/2“
  DN20 (DN25 / d25 / d3/4“)
  DN25 d32 d1“
  DN32 (DN40 / d40 / d1 1/4“)
  DN40 d50 d1 1/2“
  DN50 d63 d2“

Connections:

- Solvent cement socket DIN / ASTM / JIS
  PVC
- Solvent cement spigot DIN
  PVC
- Threaded socket BSP / NPT
  PVC / PP
- Fusion sockets DIN
  PP / PVDF
- Fusion spigots DIN
  PP / PVDF / PE
- Flange DIN
  PVC

Operation pressure:

- PVC / PVDF PN16
- PP PN10

Technical specification:

- safety handle system
- radial installation or removal
- all side blocked ball
- mechanically turned ball
- full sectional area of flow (nominal bore)
- floating ball

SAFETY HANDLE SYSTEM

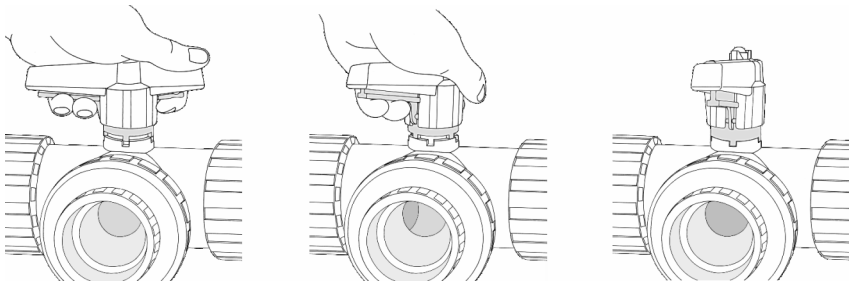

This print contains no warranty promise, but it should give you some first information. The product range is extended continuously, therefore the versions and types correspond to the actual status of printing.
Subject to technical modifications!

3-way Ball Valve S4
hand operated

Dimensions:

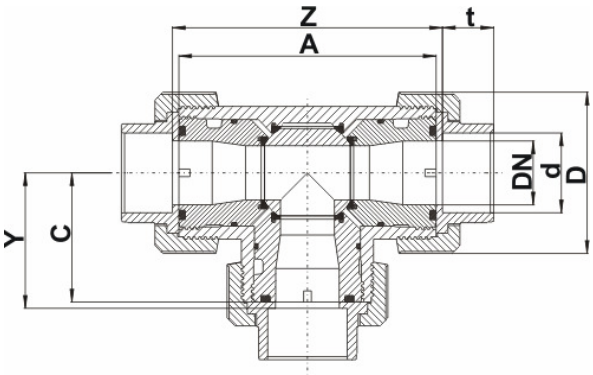

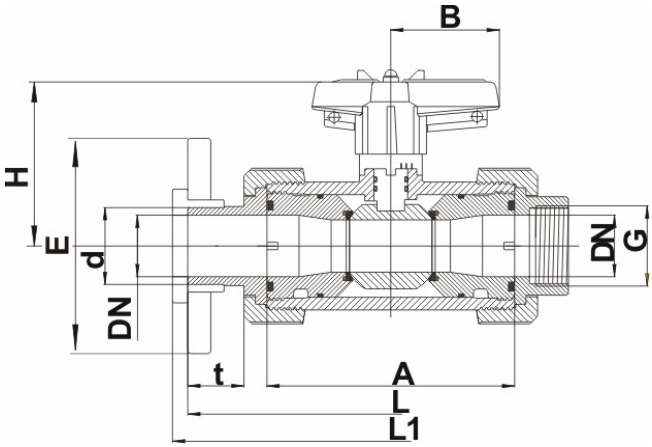

PVC-U
Possible connections
PVC solvent cement socket / solvent cement spigot / threaded socket / loose flange
PE fusion spigots

DN	10	15	20	25	32	40	50
d	16	20	25	32	40	50	63
G GM[1]	3/8“	1/2“	3/4“	1“	1 1/4“	1 1/2“	2“
A	100	100	120	120	162	162	181
B	40	40	51,5	51,5	73	73	85
C	50	50	60	60	81	81	90,5
D	53	53	70	70	101	101	124,5
H	72	72	81,5	81,5	107,5	107,5	116,5
t KM[2] / KS[3]	16,5	16,5	20	22,5	27,5	31,5	38,5
t SS PE[4]	13	14,5	-	18,5	-	29	31
E LF[5]	90	95	-	115	-	150	165
L KM[2] / GM[1]	138	138	166	172	224	234	269
L KS[3]	153	163	-	200	-	261	295
L PE SS[4]	150	160	-	198	-	246	269
L1 LF[5]	159	169	-	206	-	267	301
Y	53	53	63	63	84,5	85,5	96
Z	106	106	126	126	169	171	192
PN	16	16	16	16	16	16	16
PN LF[5] PE[4]	10	10	10	10	10	10	10

Dimensions in mm

[1] GM = threaded socket
[2] KM = solvent cement socket
[3] KS = solvent cement spigot
[4] SS PE = fusion spigot PE
[5] LF = loose flange
- = currently not available

3-way Ball Valve S4
hand operated

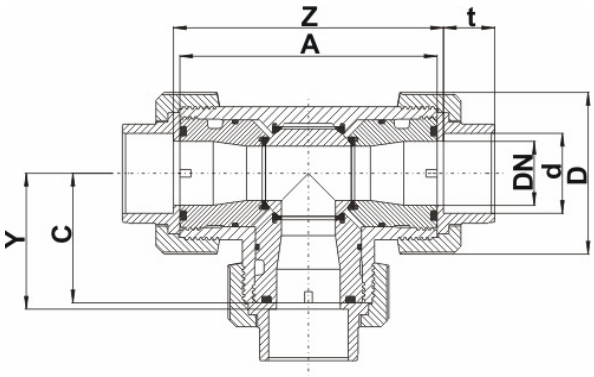

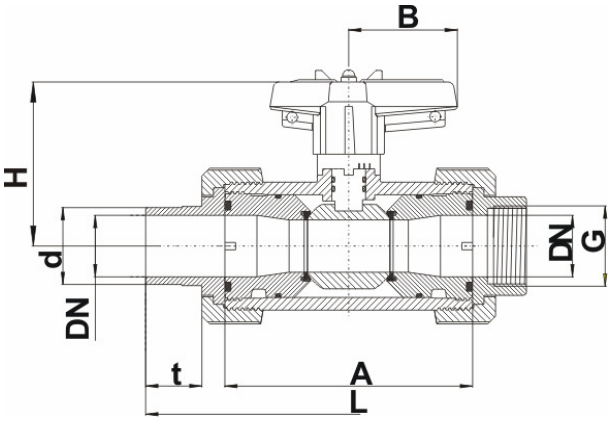

PP
Possible connections
PP fusion socket / fusion spigot / threaded socket

DN	10	15	20	25	32	40	50
d	16	20	25	32	40	50	63
G GM[1]	3/8“	1/2“	3/4“	1“	1 1/4“	1 1/2“	2“
A	98	98	118	118	159	159	177
B	40	40	51,5	51,5	73	73	85
C	49	49	59	59	79,5	79,5	88,5
D	53	53	71	71	100	100	120,5
H	72	72	81,5	81,5	107,5	107,5	116,5
t_{min} SM[2] / SS[3]	13	14,5	16,5	18	20,5	23,5	27,5
L SM[2]	136	136	163	168	220	229	263
L SS[3]	150	160	190	196	247	256	289
L GM[1]	136	136	-	168	-	229	263
Y	55	53,5	65,5	66	89,5	91	104
Z	110	107	131	132	179	182	208
PN	10	10	10	10	10	10	10

Dimensions in mm

[1] GM = threaded socket
[2] SM = fusion socket
[3] SS = fusion spigot
- = currently not available

3-way Ball Valve S4
hand operated

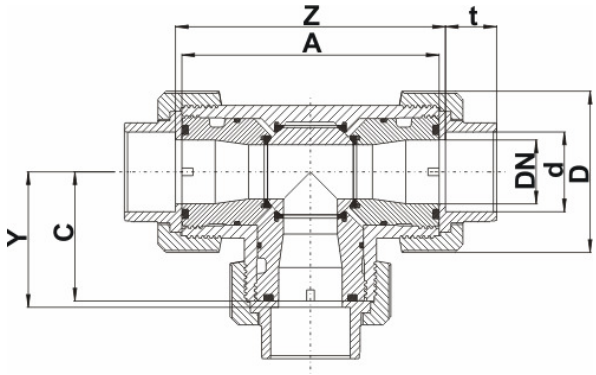

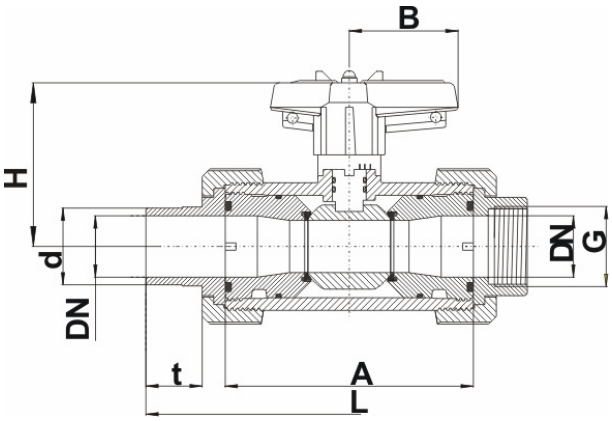

PVDF
Possible conenctions
PVDF fusion socket / fusion spigot / threaded socket

DN	10	15	20	25	32	40	50
d	16	20	25	32	40	50	63
G GM[1]	3/8“	1/2“	3/4“	1“	1 1/4“	1 1/2“	2“
A	98	98	117	117	158	158	176
B	40	40	51,5	51,5	73	73	85
C	49	49	59	59	79	79	88
D	52,5	52,5	70	70	98,5	98,5	118
H	72	72	81,5	81,5	107,5	107,5	116,5
t_{min} SM[2] / SS[3]	13	14,5	16,5	18	20,5	23,5	27,5
L SM[2]	136	136	162	167	219	228	262
L SS[3]	26	31,5	36	39,5	44	48,5	55,5
L GM[1]	136	136	-	168	-	228	262
Y	55	53,5	65,5	66	89	90,5	103,5
Z	110	107	130	131	178	181	207
PN	16	16	16	16	16	16	16

Dimensions in mm

[1] GM = threaded socket
[2] SM = fusion socket
[3] SS = fusion spigot
- = currently not available

3-way Ball Valve S4
hand operated

Exploded drawing:

01. Handle
02. O-Ring
03. Shaft
04. Body
05. Ball „L“ or „T“
06. Ball seating joint
07. O-Ring
08. O-Ring
09. Thrust collar
10. O-Ring
11. Connections
    solvent cement stocket / spigot
    fusion socket / spigot
    threaded socket
    flange adaptor with loose flange
12. Union nut
13. Locking sleeve
21. Spigot for opening the thrust collar
22. Screw
23. Cover for screw

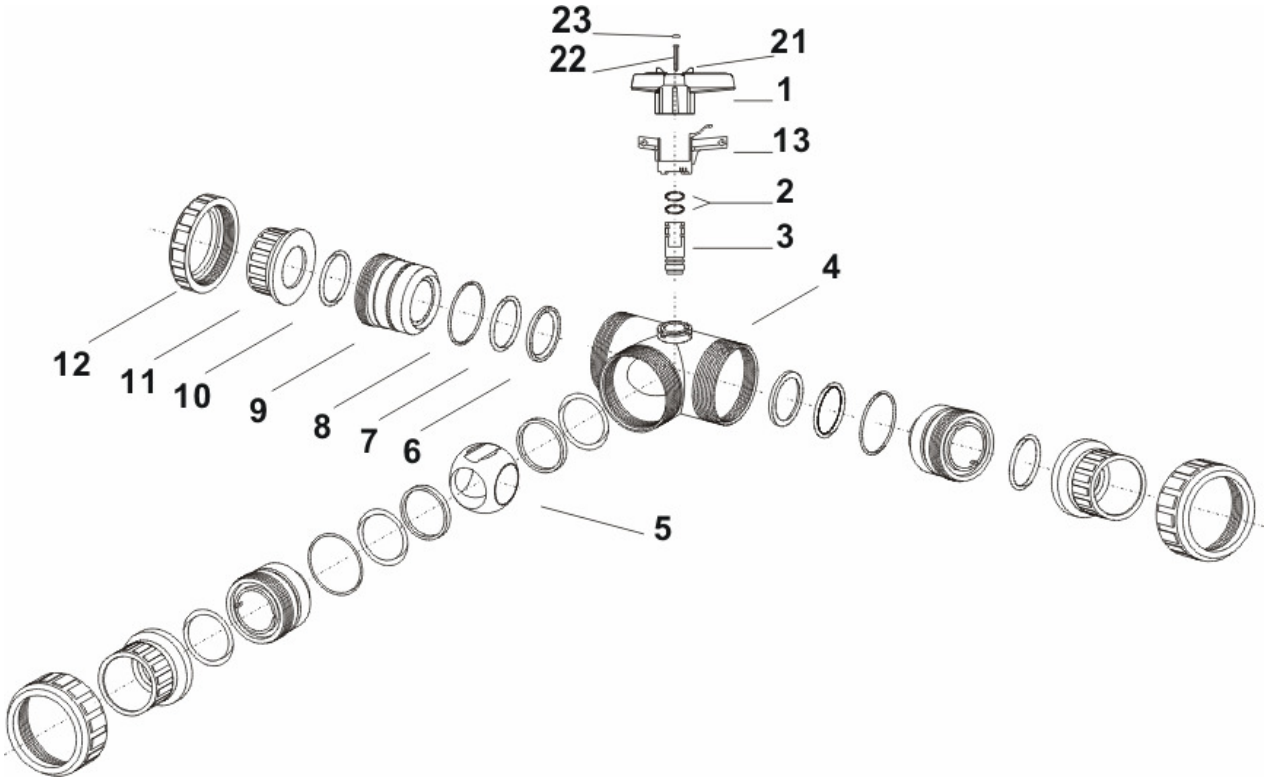

3-way Ball Valve S4
hand operated

Diagrams:

Flow-characteristic

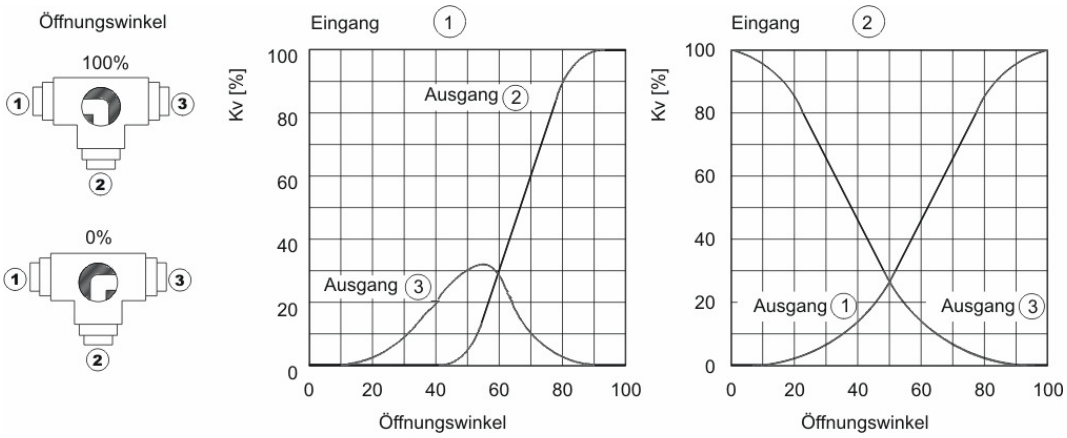

Pressure-Temperature-Diagram – PVC-U

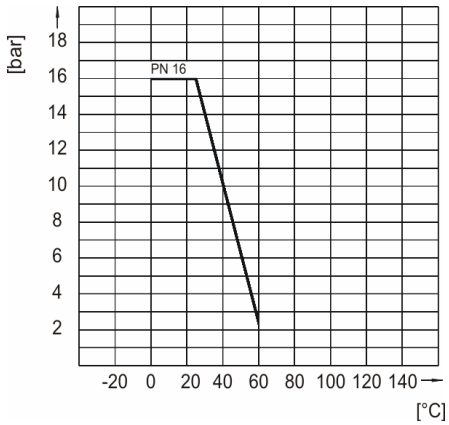

Pressure-Temperature-Diagram – PP

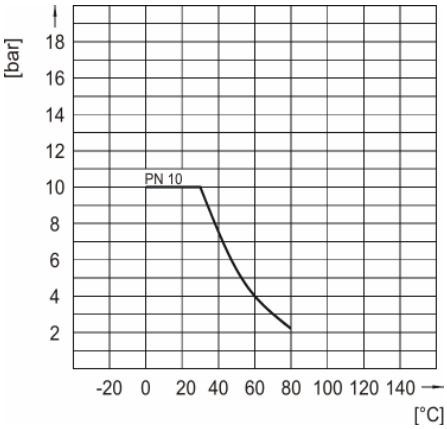

Pressure-Temperature-Diagram – PVDF

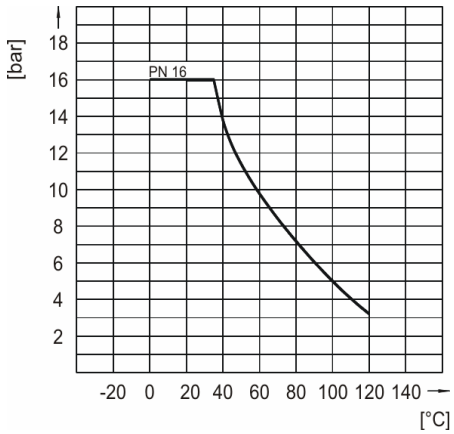

3-way Ball Valve S4
hand operated

Pressure-Loss-Diagram

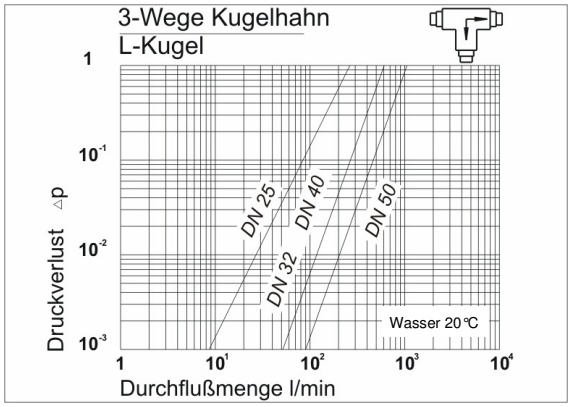

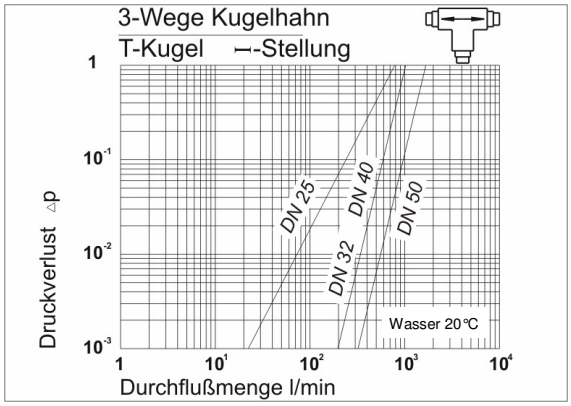

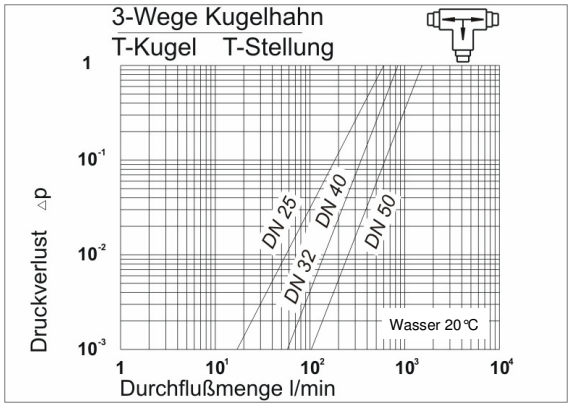

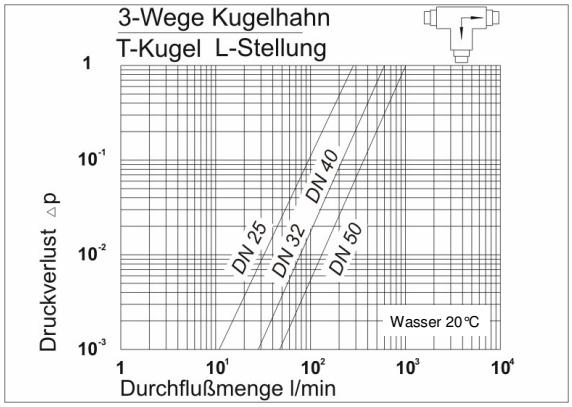

Torque